Acoustic Baffles Dome

ø1800 | 1200 x 1800 frame

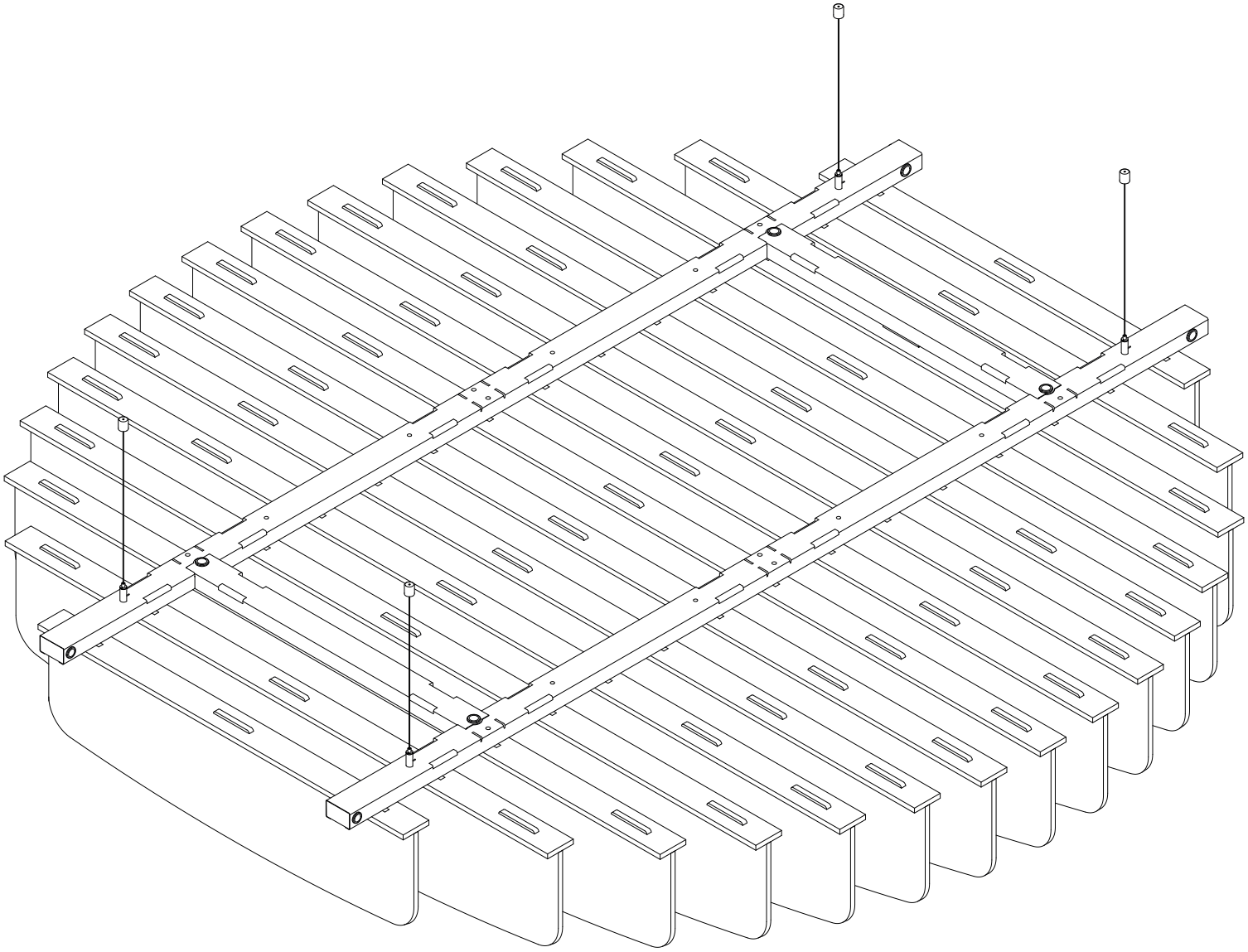

RE:FELT

Overview elements

12x
push rivet
001

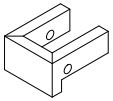

4x
end cap
002

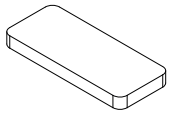

4x
end spacer
003

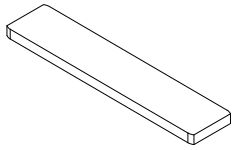

28x
spacer
004

4x
ceiling mount
005

4x
steel wire
006

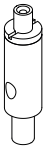

4x
cable gripper
007

4x
m6 nut
008

Not included

Make sure you use the correct kind of mounting materials for the ceiling material

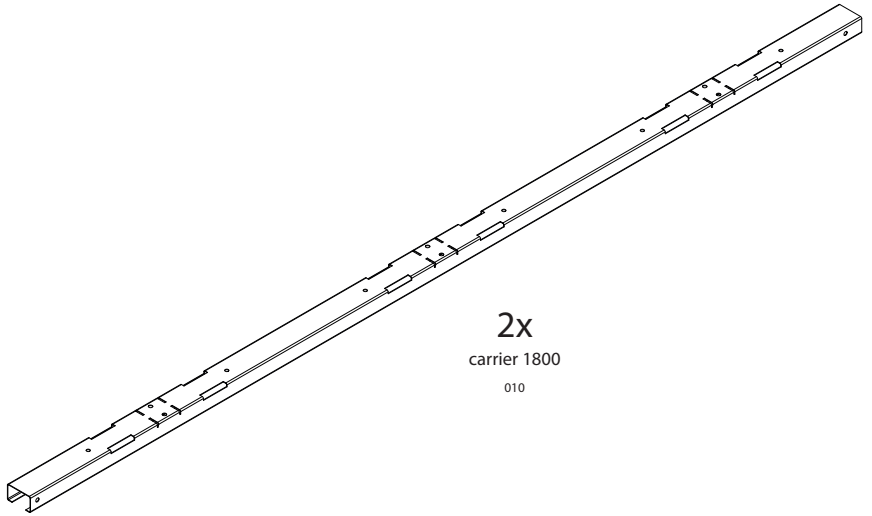

2x
carrier 1800
010

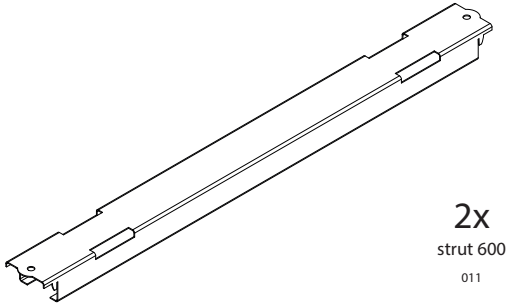

2x
strut 600
011

RE:FELT

1.

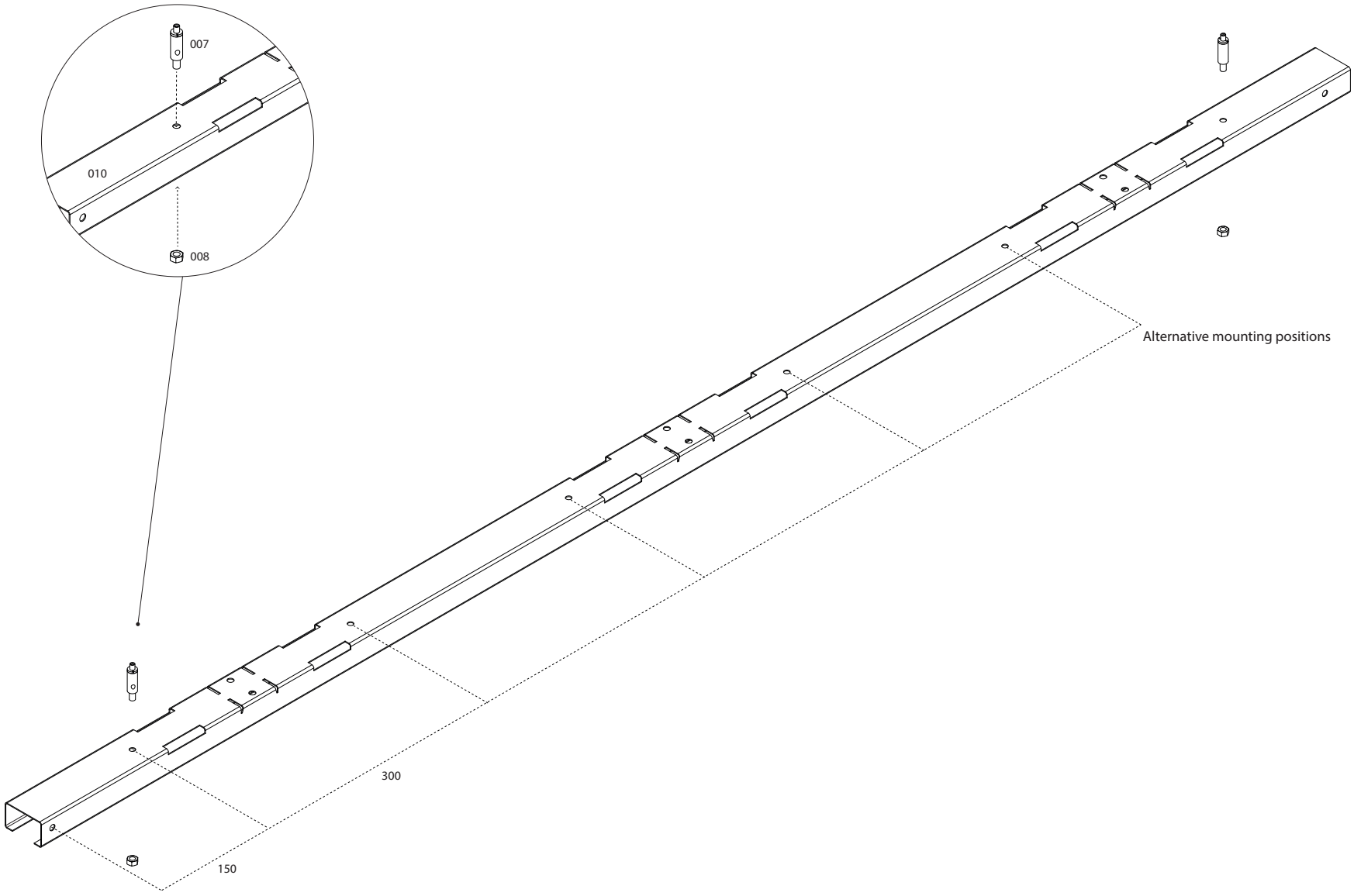

RE:FELT

2.

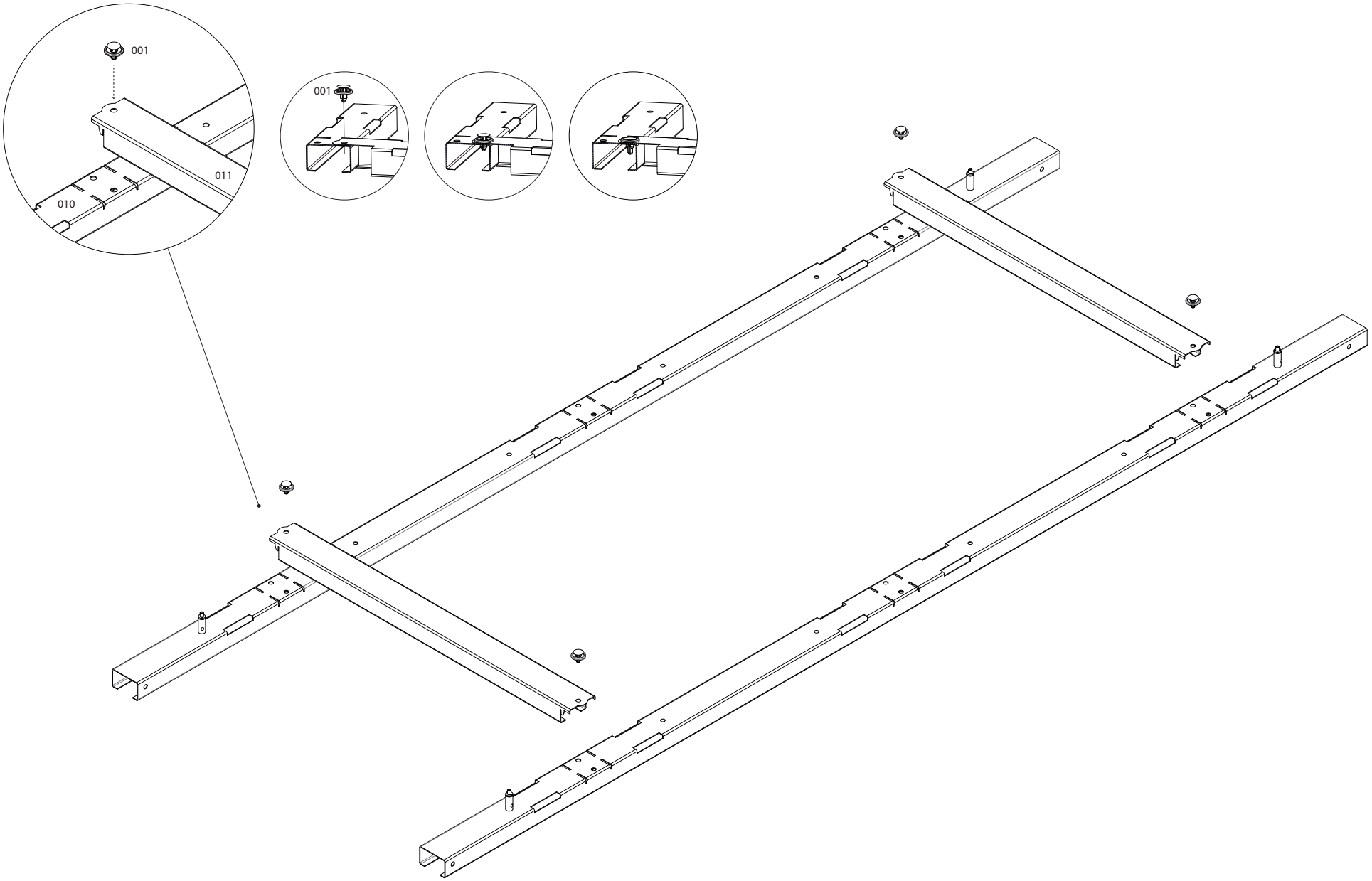

RE:FELT

3. Determine the position on the ceiling and mount the ceiling mounts

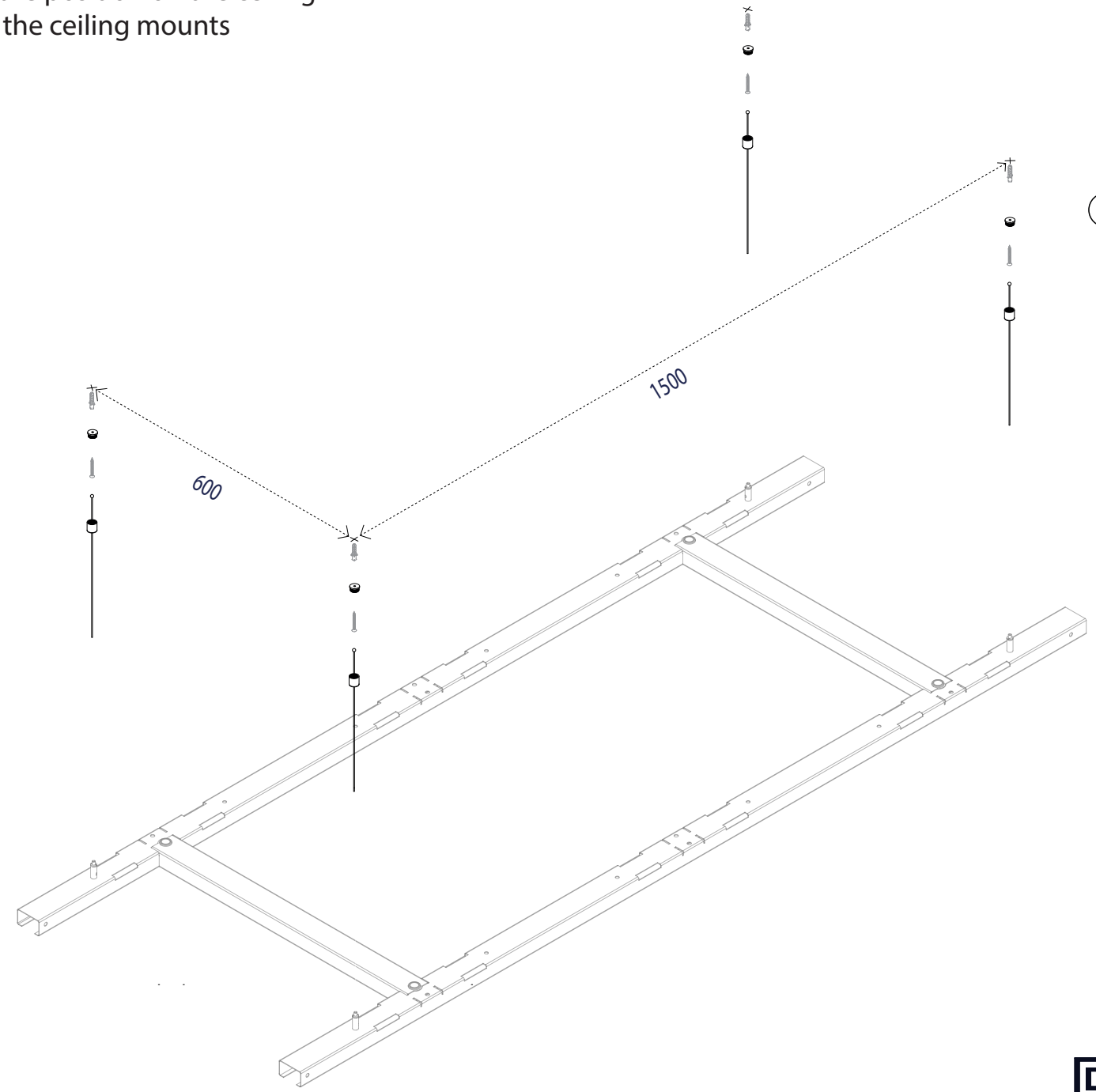

Make sure you use the correct type of tools and mounting materials for the type of ceiling

RE:FELT

4.

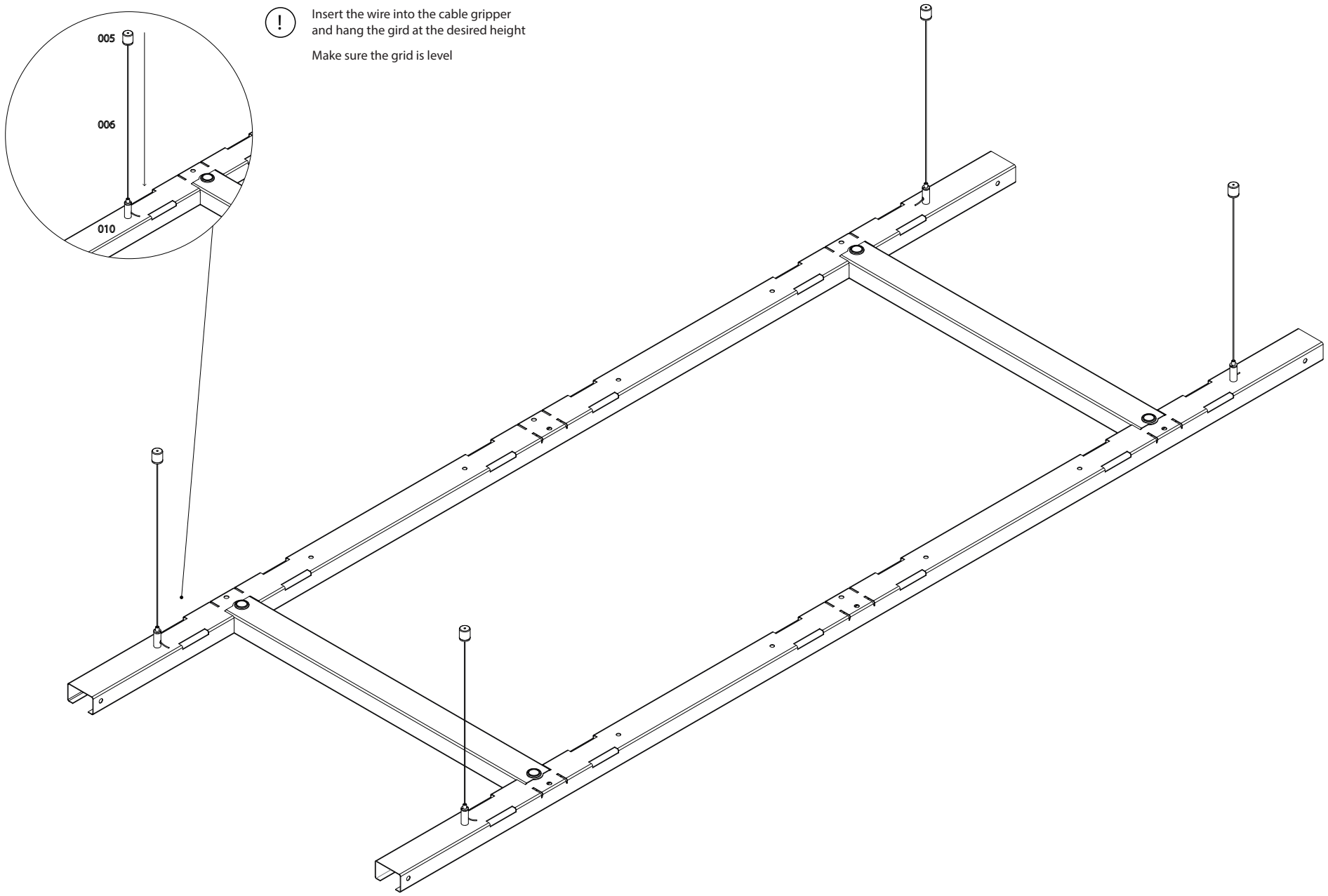

Insert the wire into the cable gripper
and hang the gird at the desired height

Make sure the grid is level

RE:FELT

5.

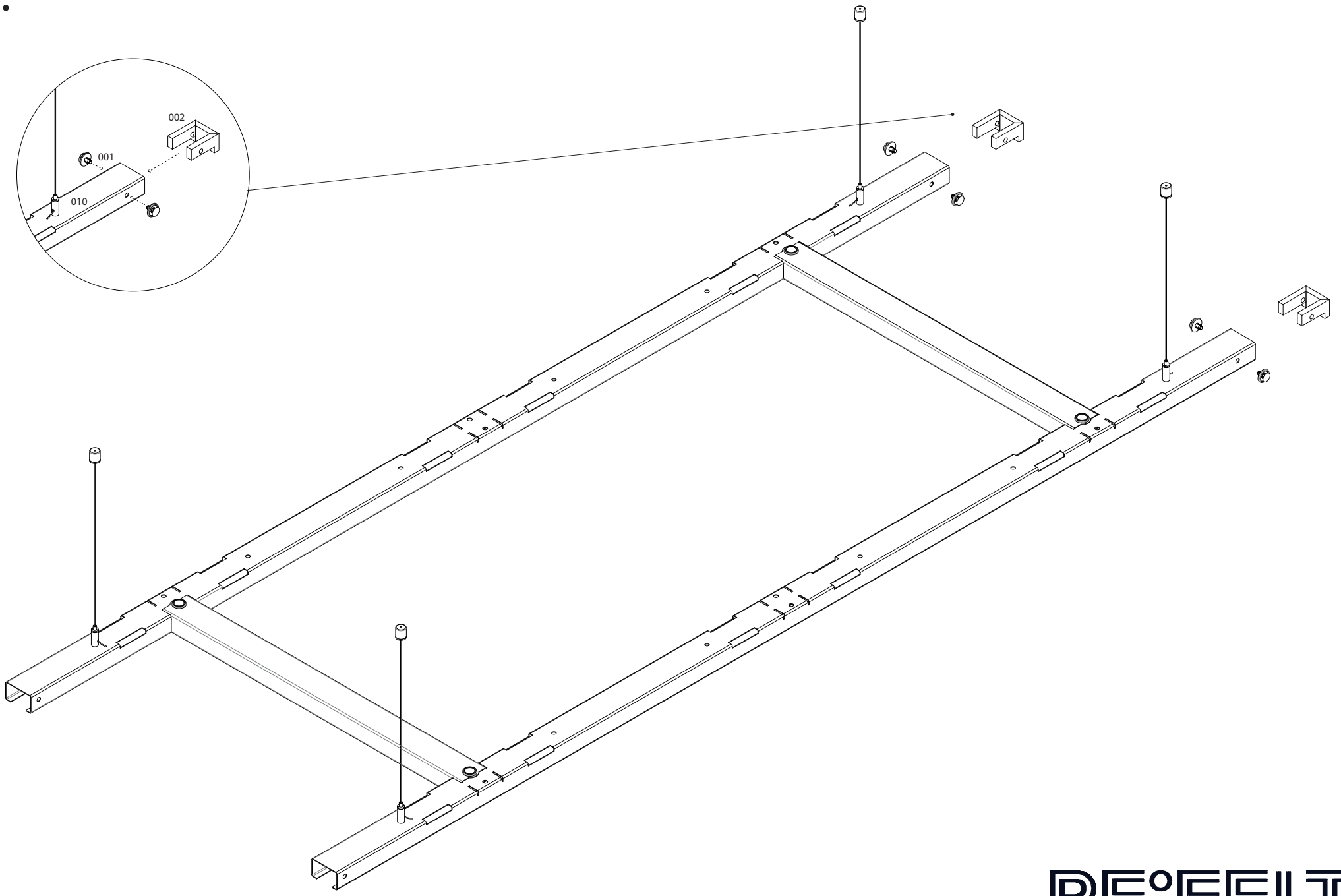

RE:FELT

6.

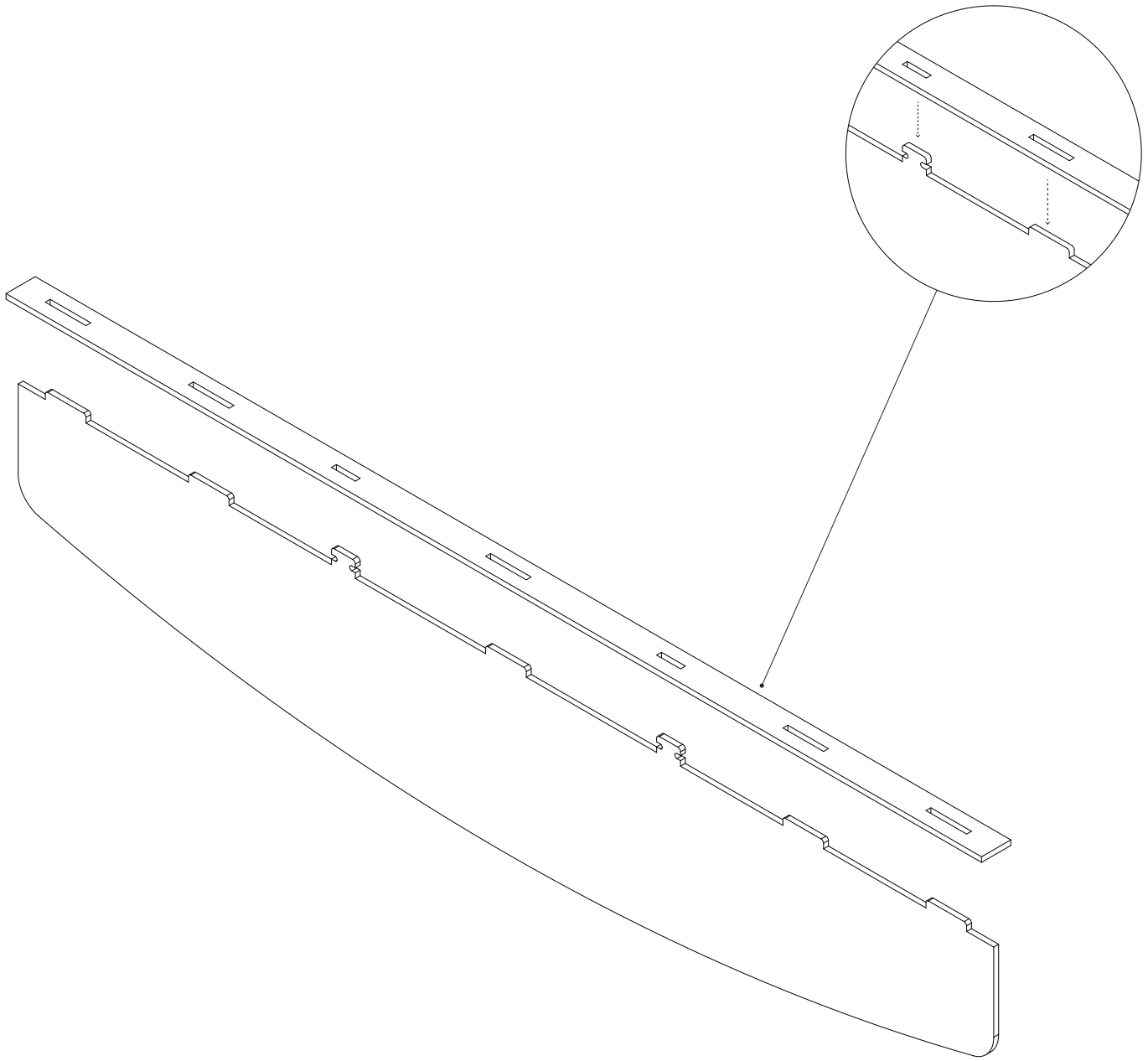

RE:FELT

7.

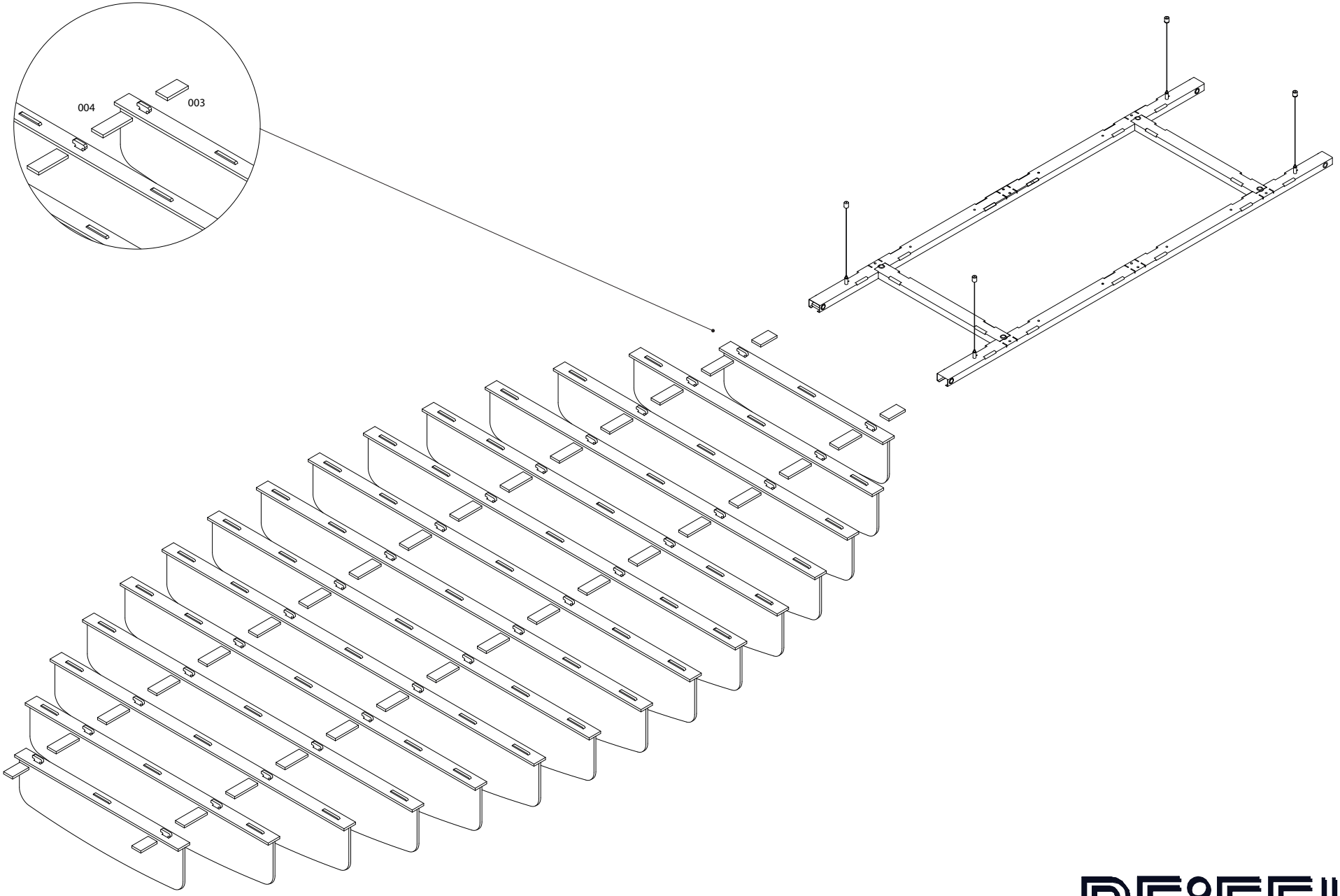

RE:FELT

8.

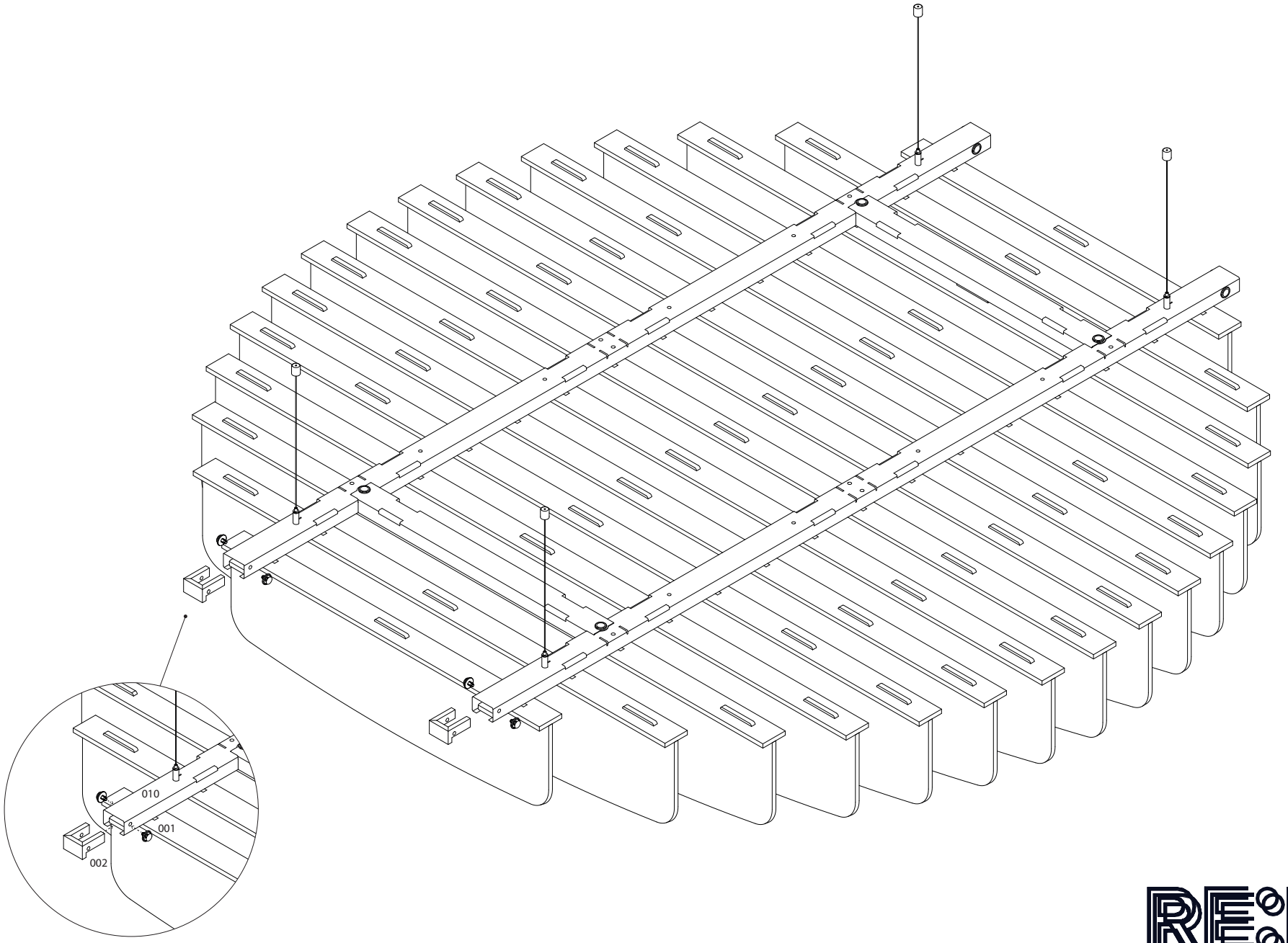

REFELT

9.

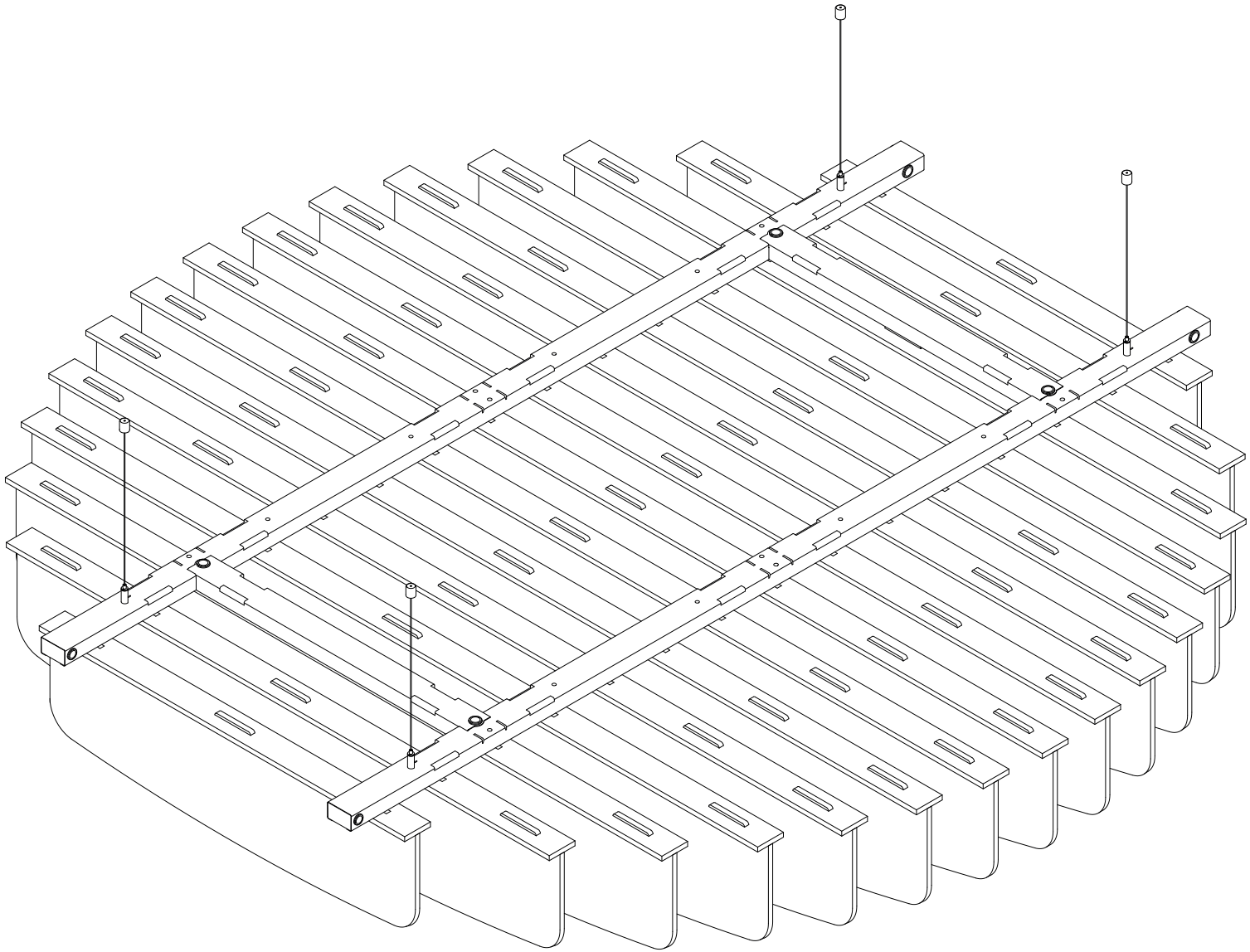

REFELT